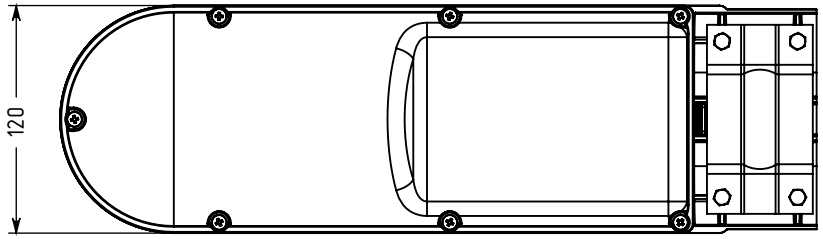

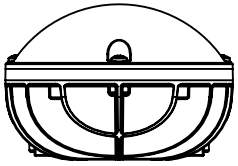

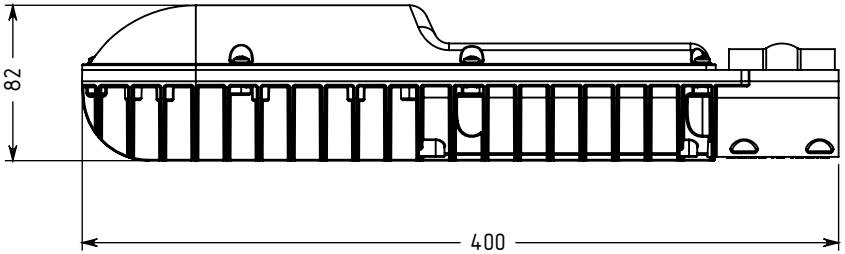

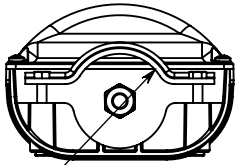

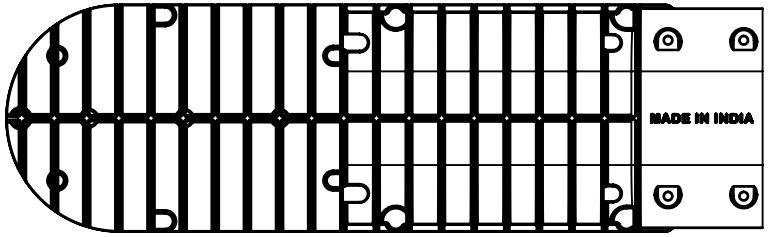

PCB SIZE

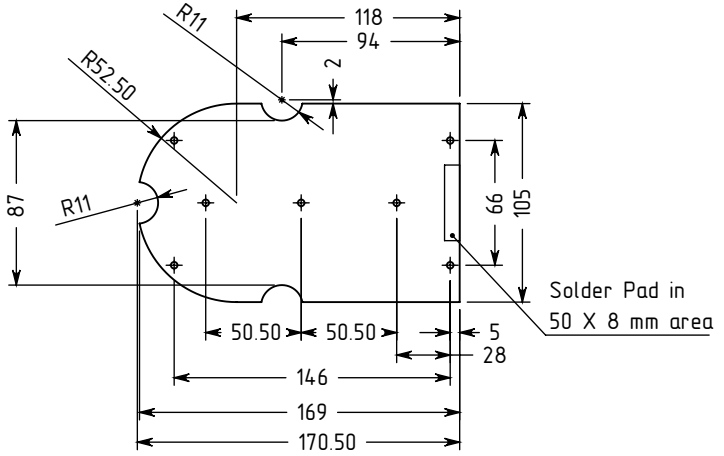

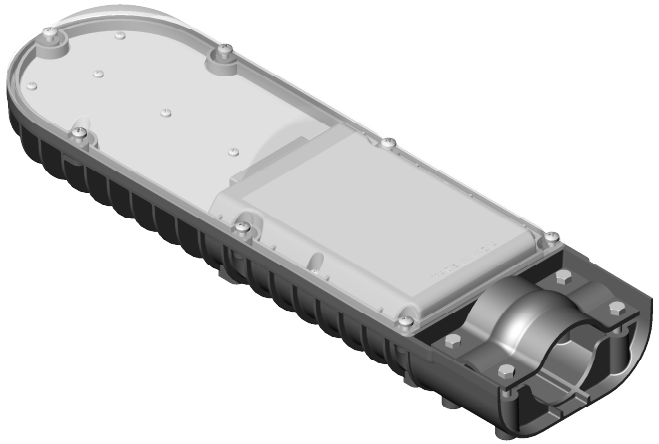

STREET LIGHT SSL-40 60W	
PCB SIZE	: AS PER DRAWING
PCB FIXING CENT	: AS PER DRAWING
DRIVER AREA	: 145 x 85 x 40
All Dimensions are in mm.	